RevNo	Revision note	Date	Signature	Checked

MODEL NO.	STOCK CODE	VARIANTS
LS-20-A	(#3177)	NORMALLY CLOSED DIGITAL
LS-20-B	(#3178)	NORMALLY OPEN DIGITAL

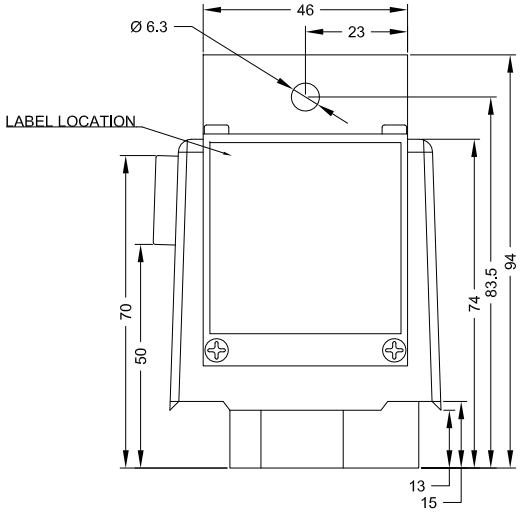

PIN #	DESCRIPTION
1	PULSE INPUT (PWM)
2	NO CONNECTION
3	NO CONNECTION
4	NO CONNECTION
5	OVERRIDE (SEE NOTES)
6	GND
7	NORMALLY CLOSED OUTPUT
8	BAT +12/24 Vdc

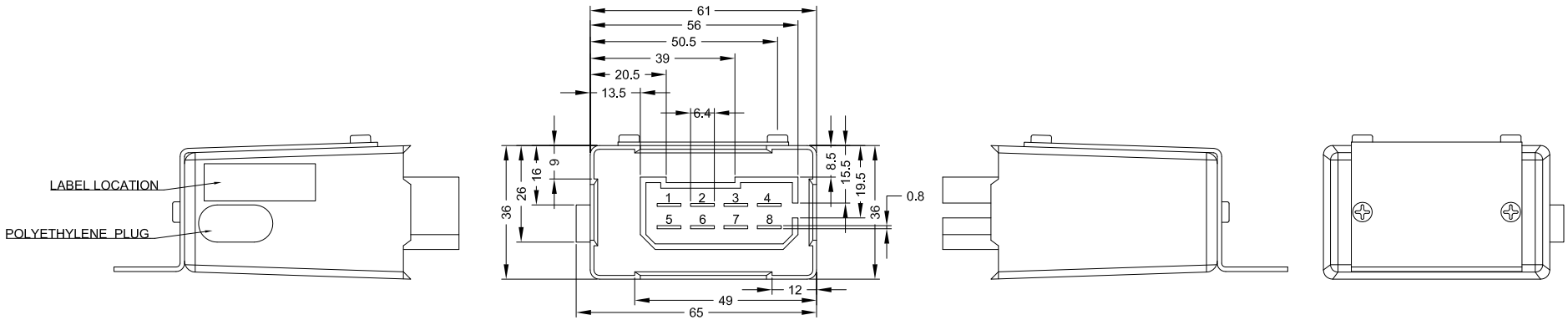

NOTES:
DIMENSIONS IN MM.
REFER TO USER MANUAL FOR CONFIGURING SPEED SWITCH.
FINISH: BLACK.
MATERIAL: CASING - ABS PLASTIC, BRACKET - ALUMINUM, PLUG - BLACK POLYETHYLENE.
OVERRIDE: THE OVERRIDE CAN OVERRIDE THE OUTPUT OF THE SWITCH:
IF CONNECTED TO <1V OUTPUT IS ON.
IF CONNECTED TO >4.5V OUTPUT IS OFF.
IF IT IS NOT CONNECTED AT ALL THEN THE SWITCH WILL OPERATE NORMALLY.

PROPRIETARY NOTICE
THIS DESIGN AND TECHNICAL INFORMATION APPEARING ON THIS DRAWING IS THE PROPERTY OF BRIGADE ELECTRONICS PLC, AND IS DISCLOSED IN CONFIDENCE. IT IS NOT TO BE COPIED, REPRODUCED, REVEALED TO OR APPROPIATE BY OTHERS, EITHER IN WHOLE OR IN PART WITHOUT THE EXPRESS WRITTEN CONSENT OF BRIGADE ELECTRONICS PLC.

Itemref	Quantity	Title/Name, designation, material, dimension etc		Article No./Reference	
Designed by M.BUTLER	Checked by G.MABB	Approved by - date S.MATTHEWS	Filename	Date 15/09/09	Scale N/A

BRIGADE ELECTRONICS

LS-20-A (#3177)

BE-000618-00-09 | Edition A | Sheet 1/1